FIGURE B.9
TYPICAL INSPECTION CHAMBER DETAIL - TYPE 3 (Flexible material detail)

Maximum depth from cover level to soffit of pipe
in areas subject to vehicle loading 3 m, non-entry

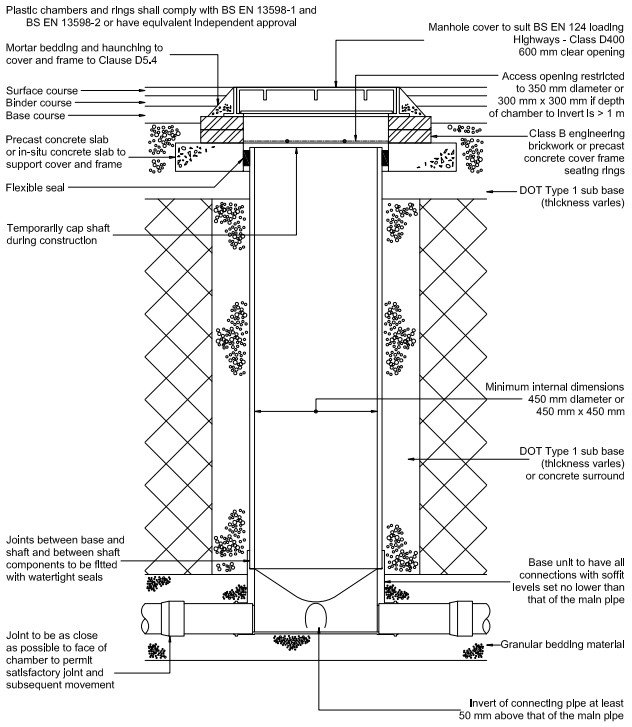

Note: Where the access chamber Is In the highway the Highway Authority can have specific requirements

Not to scale

FIGURE B.10
ALTERNATIVE TOP DETAILS FOR LIGHT VEHICLE LOADING AND LANDSCAPED AREAS - TYPE 3

Plastic chambers and rings shall comply with BS EN 13598-1 and BS EN 13598-2 or have equivalent independent approval

Sited In domestic driveways or footways

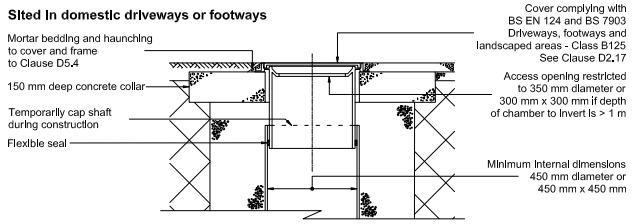

Sited in domestic gardens

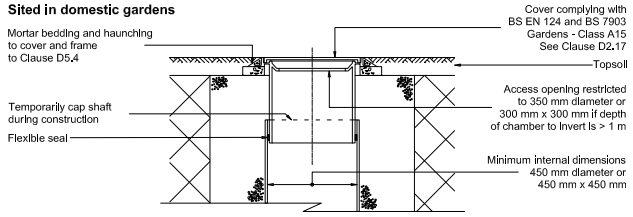

Note: Where the access chamber Is In the highway the Highway Authority can have specific requirements

Not to scale

FIGURE B.11
TYPICAL INSPECTION CHAMBER DETAIL - TYPE 3 (Rigid material detail)

Maximum depth from cover level to soffit of pipe
in areas subject to vehicle loading 3 m, non-entry

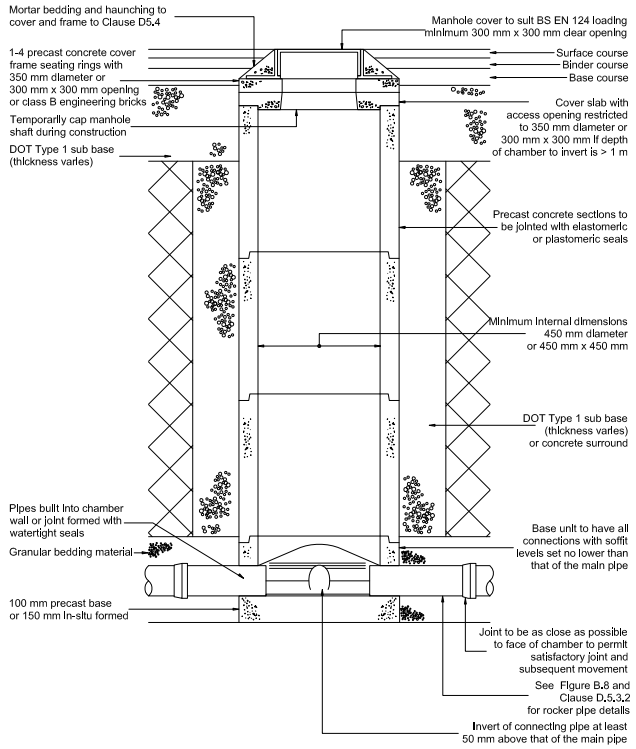

Note: Where the access chamber Is In the highway the Highway Authority can have specific requirements

Not to scale

FIGURE B.12
TYPICAL INSPECTION CHAMBER DETAIL - TYPE 3 (Rigid material detail)

Alternative maximum depth from cover level to soffit of pipe 3 m for areas not subject to vehicle loading or areas subject to light vehicle loading, non-entry

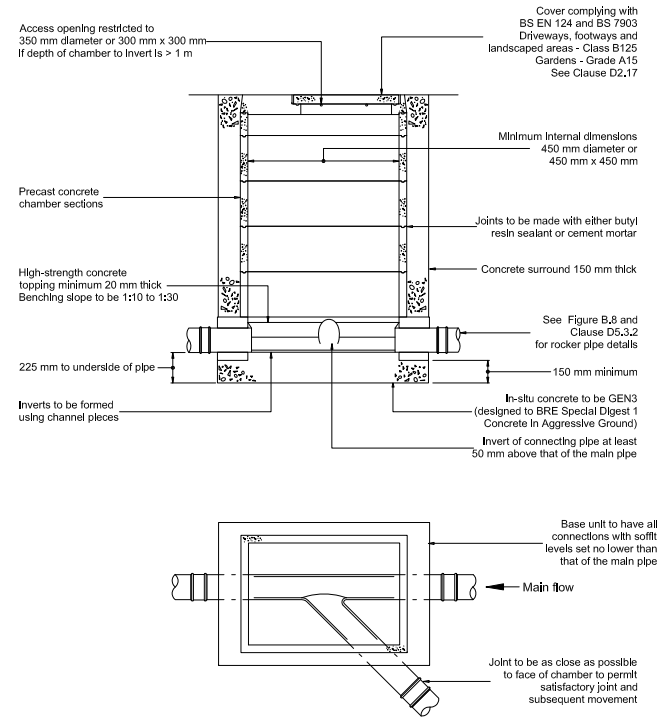

Note: Where the access chamber is in the highway the Highway Authority can have specific requirements

Not to scale

FIGURE B.13
ALTERNATIVE BASE LAYOUTS FOR TYPE 3 CHAMBERS

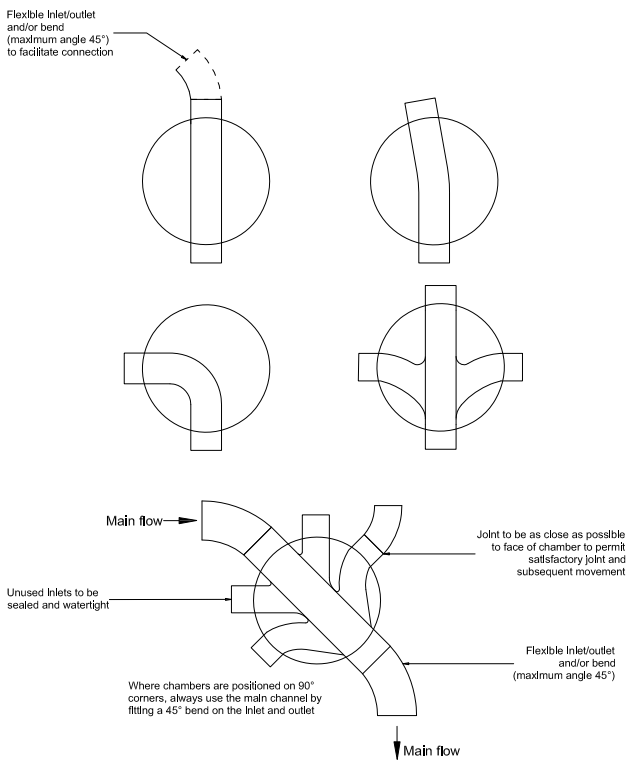

Note: Where a bend Is used Immediately outside the manhole, this may be used as the rocker pipe

Not to scale

FIGURE B.14
TYPICAL INSPECTION CHAMBER DETAIL - TYPE 4 (Flexible material detail)

Maximum depth from cover level to soffit of pipe 2 m, non-entry

Plastic chambers and rings shall comply with BS EN 13598-1 and BS EN 13598-2 or have equivalent independent approval

Sited In driveways/paved areas

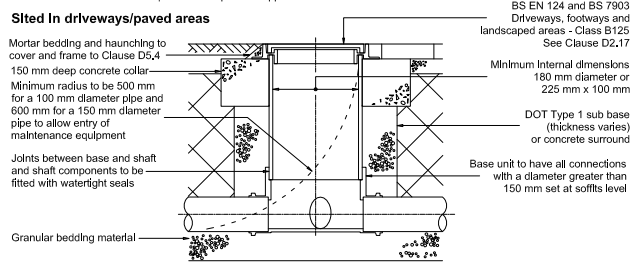

Sited In domestic gardens

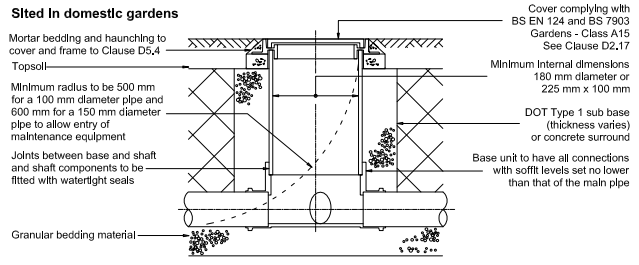

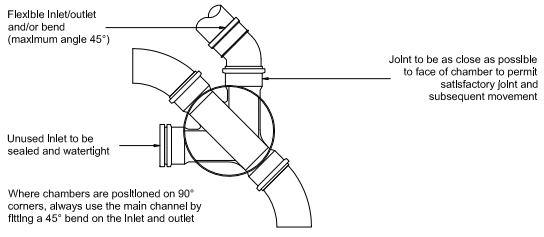

Note: Where the access chamber is in the highway the Highway Authority can have specific requirements

Not to scale

FIGURE B.15
TYPICAL INSPECTION CHAMBER DETAIL - TYPE 4 (Alternative construction detail)

Maximum depth from cover level to soffit of pipe 2 m, non-entry

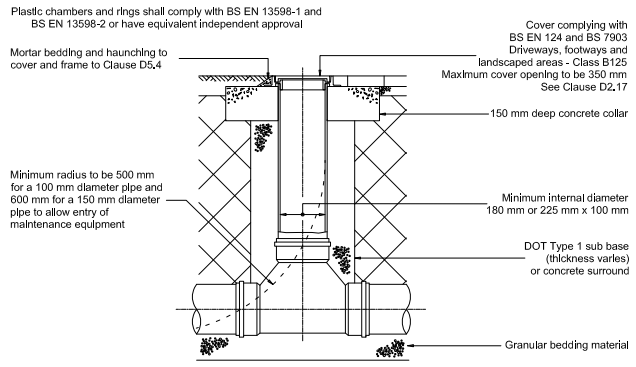

Note: Where the access chamber is in the highway the Highway Authority can have specific requirements

Not to scale

NOTE:
ALL DETAILS TAKEN FROM
"SEWERS FOR ADOPTION
A DESIGN AND CONSTRUCTION GUIDE
FOR DEVELOPERS - SMALL DEVELOPMENTS
VERSION-SEPTEMBER 2013"
TAKEN FROM THE 7th EDITION.

FIGURE B.16
TYPICAL INSPECTION CHAMBER DETAIL - TYPE 4 (Rigid material detail)

Maximum depth from cover level to soffit of pipe 1 m, non-entry

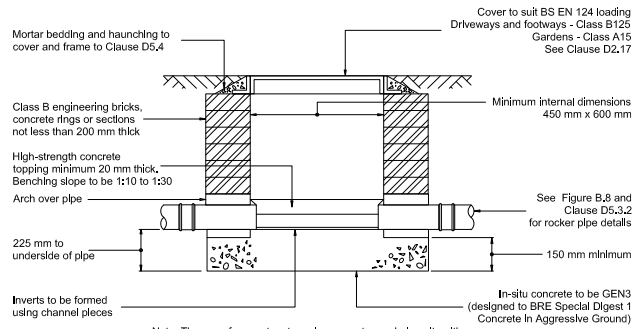

Note: The use of precast rectangular concrete manhole units with 150 mm grade GEN3 concrete surround (designed to BRE Special Digest 1 Concrete In Aggressive Ground) Is permitted.

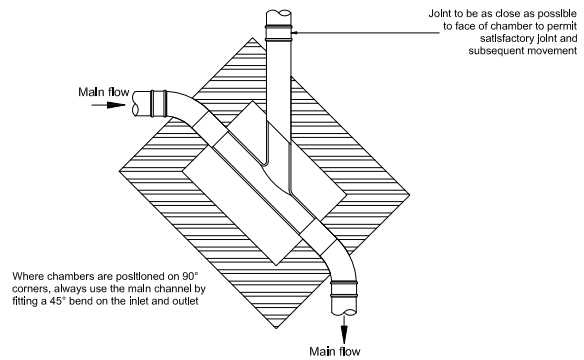

Note: Where the access chamber Is In the highway the Highway Authority can have specific requirements

Not to scale

STANDARD ADOPTABLE SEWERAGE DETAILS FOR SMALL BUILD PROJECTS
SHEET 1 OF 2

SOUTH WEST WATER